REVISIONS			
REV.	DESCRIPTION	DATE	APPROVED

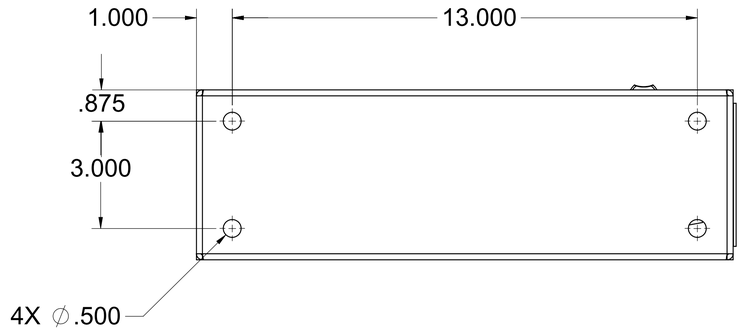

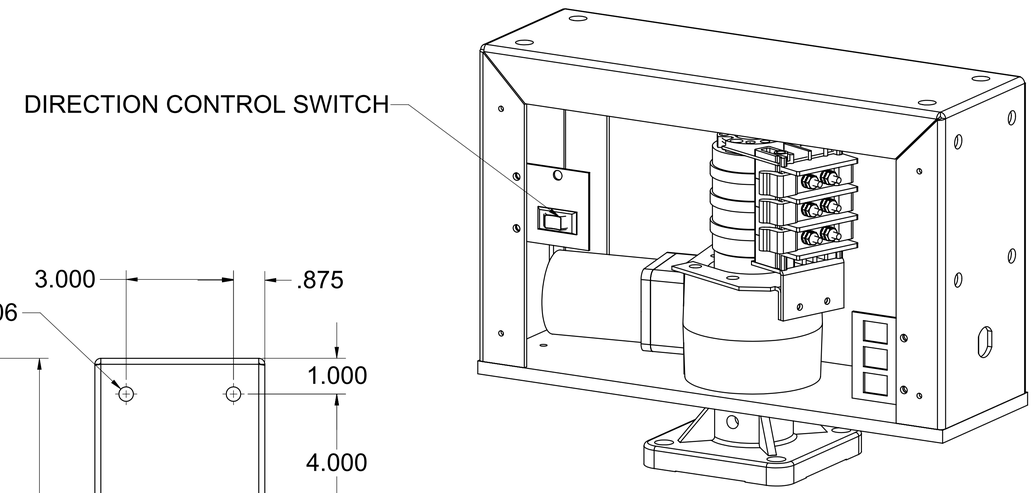

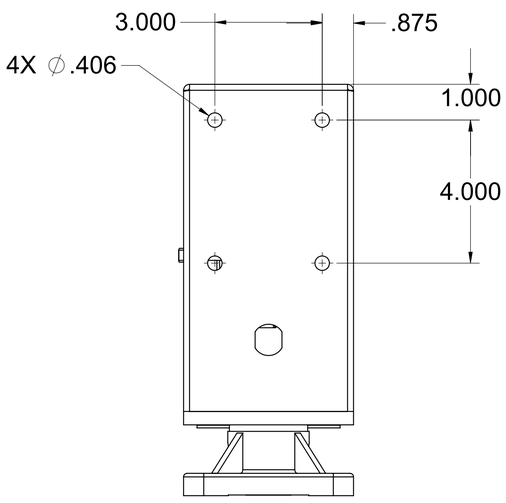

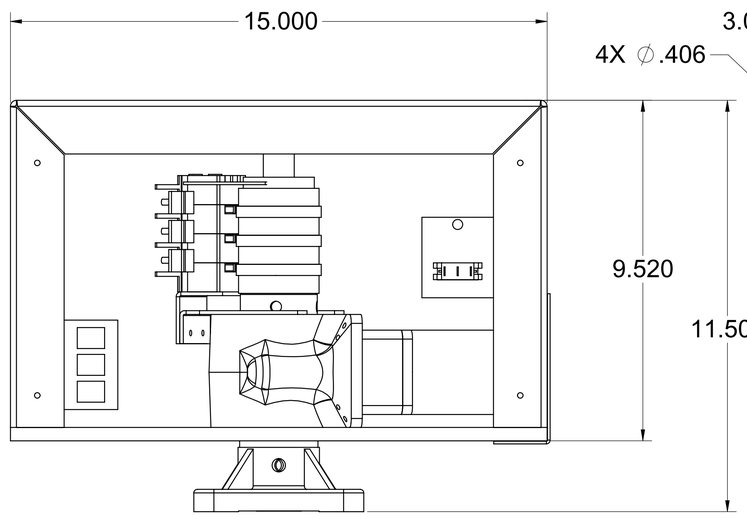

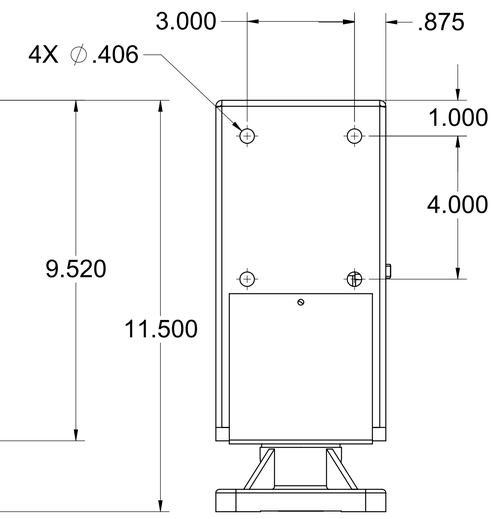

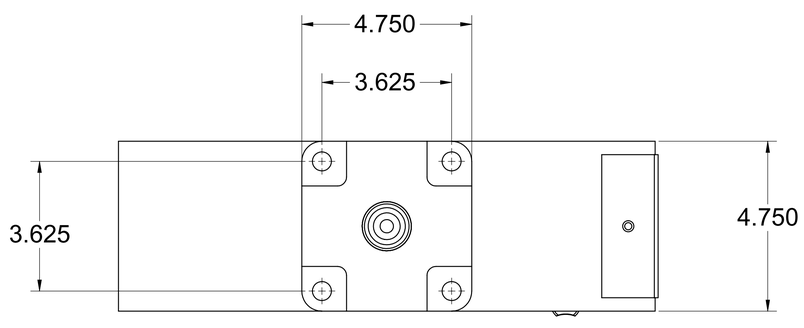

MODEL H-650 ROTATOR

WEIGHT CAPACITY:	650 lb. [295 Kg]
HANGING WEIGHT CAPACITY:	500 Lb. [227 Kg]
TORQUE OUTPUT:	95 in-lb [9.5 N-m]
MAX. OUT OF BALANCE MOMENT:	300 ft-lb [407 N-m]
STANDARD RPM (others available):	2 RPM

H-650 ROTATOR

UNLESS OTHERWISE SPECIFIED
DIMENSIONS ARE IN INCHES
TOLERANCES:
FRACTIONAL ± 1/32
ANGULAR ± 2°
DECIMAL X ± .125, XX ± .030, XXX ± .010

APPROVALS	DATE
DRAWN	
CHECKED	
ENG APPR.	

MATERIAL
FINISH
APPLICATION
NEXT ASSY
FINAL ASSY

SIZE D | DWG. NO. 153010 321 6W | REV X-03
SCALE: 1:2 | SHEET 1 OF 1